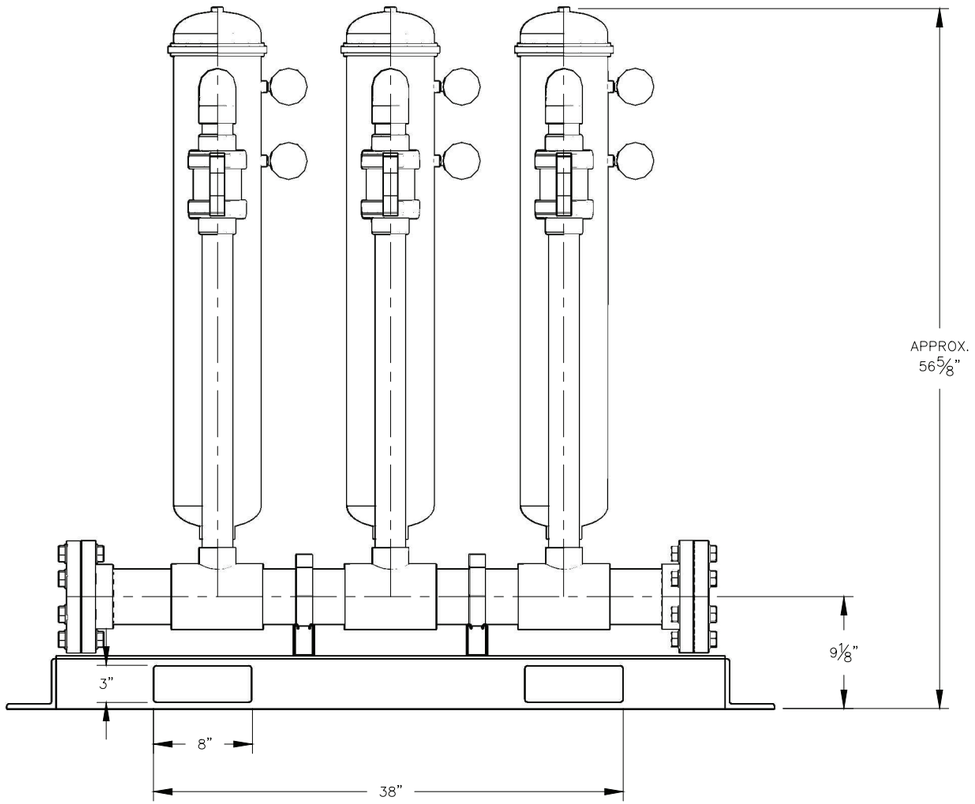

ELEVATION

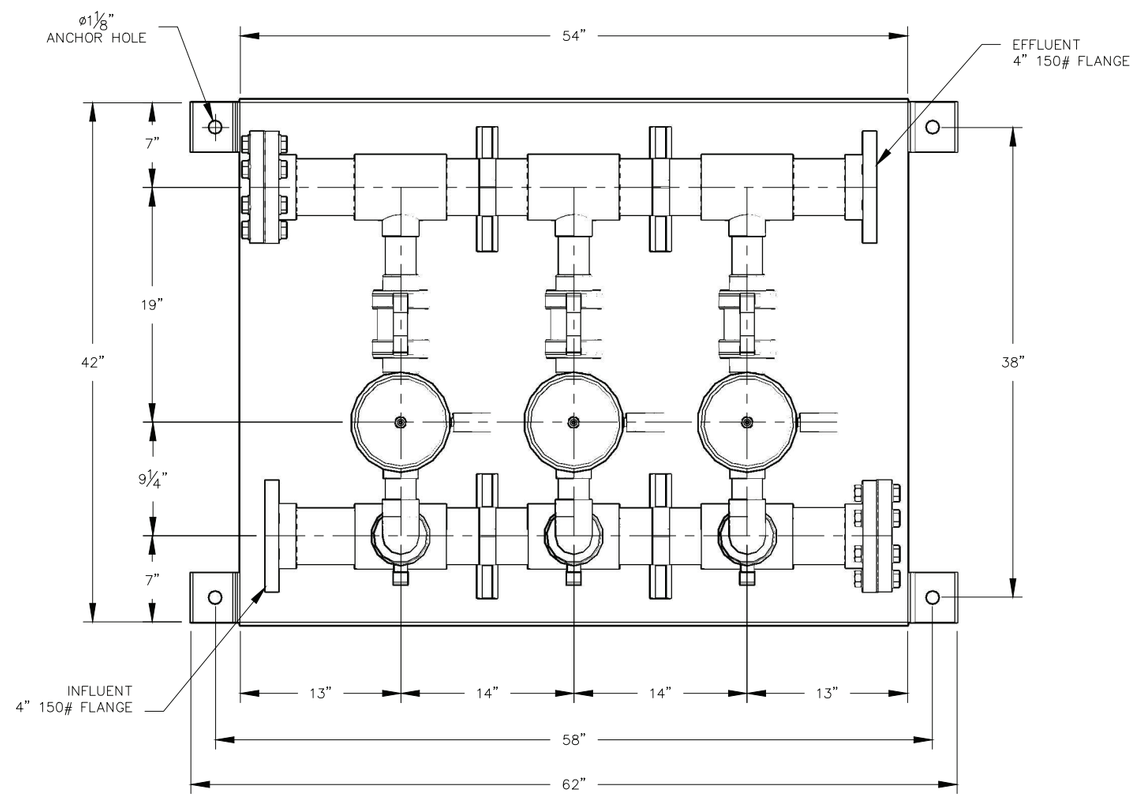

PLAN

MATERIALS OF CONSTRUCTION:

BAG FILTERS – 304L STAINLESS STEEL
PIPE – SCH 80 PVC
BALL VALVES – PVC TRUE–UNION BALL
SKID – SA–36 WELDED STEEL (PAINTED)
PRESSURE GAGE – 0–60 PSIG
HARDWARE – ASTM A307 Gr. B (PLATED)

NO.	REVISION	BY	DATE

PROJECT
TRIPLEX
BAG FILTER SKID

PROJ. NO.	SALES
P.O. NO.	

THIS DRAWING AND DESIGN ARE THE PROPERTY OF TIGG CORP. AND SHALL NOT BE REPRODUCED IN WHOLE OR IN PART NOR EMPLOYED FOR ANY PURPOSE OTHER THAN SPECIFICALLY PERMITTED IN WRITING BY TIGG CORP. THIS DRAWING LOANED SUBJECT TO RETURN ON DEMAND.

DRAWN BY	JAK
DESIGN BY	JB
CHKD. BY	JI
DATE	10/24/2013
SCALE	NTS

newterra

PLAN & ELEVATION

DWG. NO. TBFS–1001

REV. 0